Arcadian

Ligature-resistant luminaires

Arcadian is a discreet, ligature-resistant lighting solution. This circular wall- or ceiling-mounted LED luminaire is supremely impact-resistant and has been designed for both internal and external use.

Arcadian is constructed from a strong spun-steel body and a 5 mm thick, flame-retardant polycarbonate cover. SmartScan Radar, integral nightlight, and maintained emergency versions are also available.

Applications: mental healthcare, custodial, internal car parks, and associated walkways and staircases.

- Ligature-resistant design
- Anti-pick sealant can be used to seal the body whilst still allowing the cover to be removed for maintenance
- Tamper-resistant T25 pin Torx screw fixings
- Integral night light option
- SmartScan wireless technology removes the need for control cabling. Ideal for retro-fit



Notes: Finished white (RAL 9010) as standard. Other colour options are available to special order.

IP66 | IK11 | Up to 108.2 LL/CW | SMARTSCAN | LUXGUARD

Specification

Mounting	**Surface**	IP rating	**IP66**
Impact rating	**IK11**	Max presence detection height	**4 m**
Anti-ligature compliance	**Anti-ligature**		

Lighting

Lumen output	**2,555 lm - 3,565 lm**	Efficacy	**Up to 108.2 LL/CW**
Additional light element	**Integral night light**		

Emergency data

Emergency lumen output	**345 lm - 365 lm**	Emergency type	**Maintained**
Emergency duration	**3 hours**	Battery specification	**Lithium Iron Phosphate (LiFePO4)**

Arcadian

Power

LED power	**21 W - 27 W**	Circuit power	**25 W - 34 W**

Construction

Housing	**Spun steel body**	Optical assembly	**Injection moulded 5 mm thick polycarbonate cover with white (RAL 9010) painted trim (other colours available to special order)**
Cover fixings	**Stainless steel T25 pin Torx**		

LED characteristics

CRI	**80+**	Colour temperature	**3000 K** **4000 K**
Rated life (hours)	**100 K - L80/B10**	LED protection	**LUX Guard**
Driver efficiency	**>85%**	Replaceable light source	**Yes**
Power factor	**>0.95**	MacAdam ellipse	**3 Step**
Flicker metric	**IEC TR 61547-1: PstLM ≤1.0 / SVM ≤0.4**		

Compliance

UKCA	**Yes**	CE	**Yes**
Energy efficiency class	**This product contains a light source of energy efficiency class C**		

Dimensions

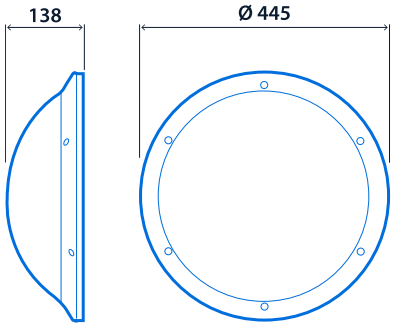

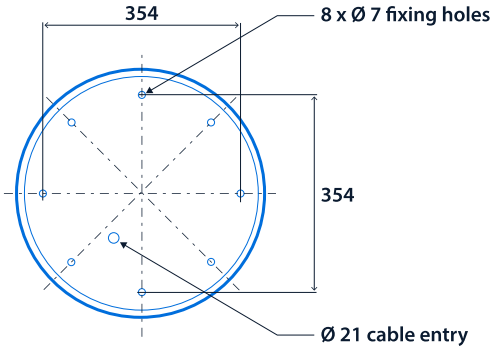

Range

LED power	Emergency system (optional)	3000 K	4000 K	Lighting control system
21 W	**W / T***	**AN17074**	**AN17075**	**R / A / L**
27 W	**W / T***	**AN19208**	**AN19209**	**R / A / L**

* **Only** available with **A / L** control type

Emergency system - prefix catalogue number with **W** SmartScan Emergency / **T** AutoTest Emergency
Lighting control system - suffix catalogue number with **R** SmartScan Radar / **A** Dimming (DALI) / **L** Non-dimming
Integral night light version - suffix catalogue number with **N**

E.g. **WAN17074RN** = 21 W / SmartScan Emergency / 3000 K / SmartScan Radar / Integral night light

Accessories

Product code	Description	Weight
KEY16976	T25 pin Torx bit - Suitable for magnetic bit holder	-

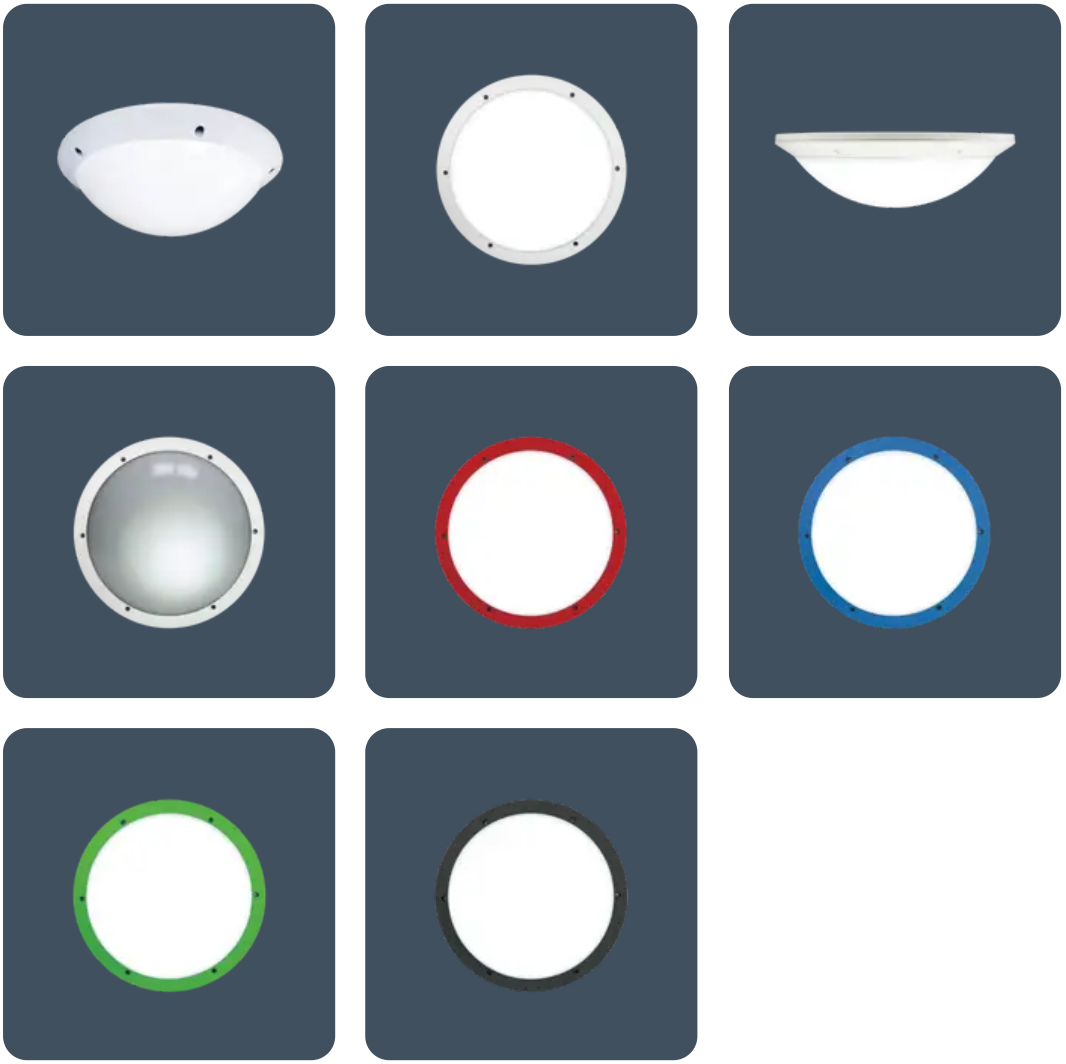

Click or scan here

View Arcadian variants using our online filtering tool



Information is correct as of 25 Nov 2026, however must not be interpreted as a guarantee of individual product performance and/or characteristics. We reserve the right to alter specifications and designs without prior notice.