Eco PIR

Stand-alone passive infra-red detector

Stand-alone passive infra-red detector for small spaces.
Suitable for switching up to 3 A.

- Ideal for small areas with low occupancy patterns
- Recessed or Surface mounting options
- 240 V / 3 A switching capacity
- Adjustable time delay (10 seconds - 25 minutes)
- Integral photocell (switching only)
- Presence or absence detection modes (absence detection requires push to make switch, not supplied)



IP20

Specification

IP rating	**IP20**

Compliance

UKCA	**Yes**	CE	**Yes**

Dimensions

Recessed Version

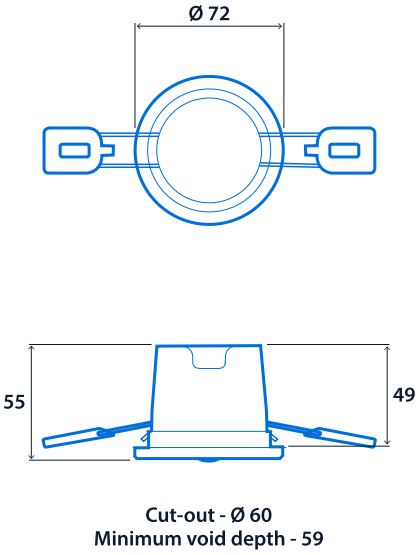

Surface Version

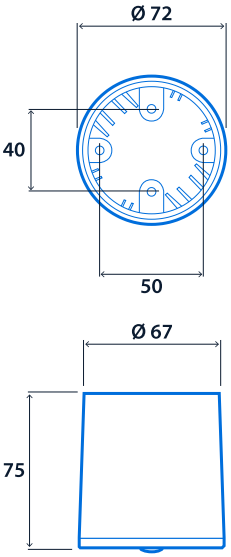





Click or scan here

View Eco PIR variants using our online filtering tool



Information is correct as of 25 Nov 2026, however must not be interpreted as a guarantee of individual product performance and/or characteristics. We reserve the right to alter specifications and designs without prior notice.