G3 Pro

Enhanced circular recessed downlighters

An elevation of the standard G3 downlighter, the G3 Pro is a recessed luminaire featuring a high-performance metalised inner reflector with wide or narrow distribution options.

G3 Pro is available with a choice of white or anti-glare black injection-moulded outer reflector. The luminaire offers excellent glare control at 50° and above, with highly efficient LEDs, available in 11 W, 24 W, and high-output 51 W versions.

Applications: offices, corridors, reception areas, toilets and retail.

- Choice of white or anti-glare black injection moulded flame-retardant outer reflector for dynamic appearance
- Excellent glare control at 50° and above
- Optional reinforcing board with centre cut aperture
- Supplied with remote gear unit fitted with 2 m lead
- SmartScan versions fitted with TEE connector for LCM wiring
- CRI 80 and CRI 90 available as standard. CRI 90 LEDs with enhanced R9 value available to special order
- SmartScan wireless technology removes the need for control cabling. Ideal for retro-fit



IP40 (IP20 above ceiling) **Up to 121.4 LL/CW** SMARTSCAN

Specification

Mounting	**Recessed**	IP rating	**IP40 (IP20 above ceiling)**
Max presence detection height	**8 m**		

Lighting

Distribution	**Broad** **Narrow**	Lumen output	**1,570 lm - 5,870 lm**
Efficacy	**Up to 121.4 LL/CW**		

Emergency data

Emergency type	**Maintained**	Emergency duration	**3 hours**
Battery specification	**Nickel Metal Hydride (NiMH)**		

Power

LED power	**11 W - 51 W**	Circuit power	**14 W - 58 W**

Construction

Housing	**High pressure die-cast aluminium ring**	Finish	**Full polyester powder coat**
Body colour	**Satin white (RAL9016)**	Optical assembly	**High performance vacuum metalised inner reflector with injection moulded flame-retardant outer reflector**
Reflector colour	**Black reflector** **White reflector**		

LED characteristics

CRI	**80+** **90+**	Colour temperature	**3000 K** **4000 K**
Rated life (hours)	**50 K - L70/B10**	Driver efficiency	**>80%**
Replaceable light source	**Yes**	Power factor	**>0.9**
MacAdam ellipse	**3 Step**	Flicker metric	**IEC TR 61547-1: PstLM ≤1.0 / SVM ≤0.4**

Compliance

UKCA	**Yes**	CE	**Yes**
Energy efficiency class	**This product contains a light source of energy efficiency class D**		

Dimensions

11W and 24W Versions

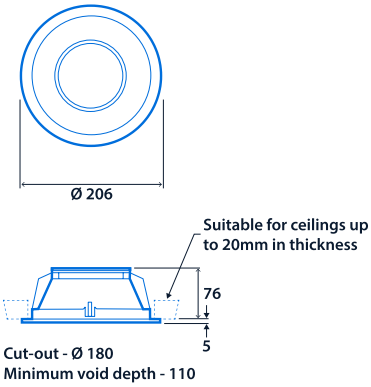

Cut-out - Ø 180
Minimum void depth - 110

51W Versions

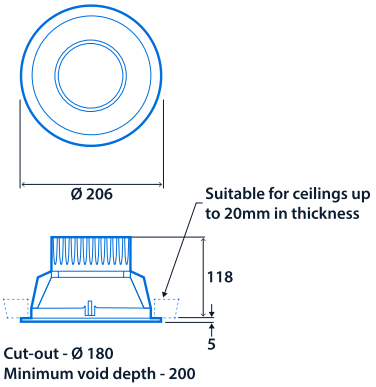

Cut-out - Ø 180
Minimum void depth - 200

Standard Remote Driver

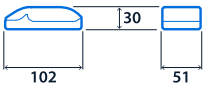

Downlighter Power Unit
for SmartScan Radar, SmartScan Radar Emergency, Emergency and AutoTest versions

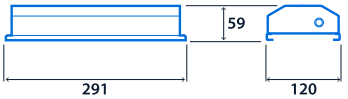

Range

		Product version	LED power	Emergency system (optional)	3000 K	4000 K	Lighting control system
White outer reflector	SmartScan	Broad distribution	11 W	**W**	**GT19380**	**GT19384**	**SS**
			24 W	**W**	**GT19381**	**GT19385**	**SS**
			51 W	**W**	**GT19382**	**GT19386**	**SS**
		Narrow distribution	51 W	**W**	**GT19383**	**GT19387**	**SS**
	Standard	Broad distribution	11 W	**T / E**	**GT19388**	**GT19392**	**A / L**
			24 W	**T / E**	**GT19389**	**GT19393**	**A / L**
			51 W	**T / E**	**GT19390**	**GT19394**	**A / L**
		Narrow distribution	51 W	**T / E**	**GT19391**	**GT19395**	**A / L**
Black outer reflector	SmartScan	Broad distribution	11 W	**W**	**GT19396**	**GT19400**	**SS**
			24 W	**W**	**GT19397**	**GT19401**	**SS**
			51 W	**W**	**GT19398**	**GT19402**	**SS**
		Narrow distribution	51 W	**W**	**GT19399**	**GT19403**	**SS**
	Standard	Broad distribution	11 W	**T / E**	**GT19404**	**GT19408**	**A / L**
			24 W	**T / E**	**GT19405**	**GT19409**	**A / L**
			51 W	**T / E**	**GT19406**	**GT19410**	**A / L**
		Narrow distribution	51 W	**T / E**	**GT19407**	**GT19411**	**A / L**

Emergency system - prefix catalogue number with **W** SmartScan Emergency / **T** AutoTest Emergency / **E** Standard Emergency
Lighting control system - suffix catalogue number with **SS** SmartScan Internal / **A** Dimming (DALI) / **L** Non-dimming

CRI 90+ versions - suffix catalogue number with **C930** 3000 K / **C940** 4000 K

E.g. **WGT19380SSC930** = White outer reflector / Broad distribution / 11 W / SmartScan Emergency / 3000 K / SmartScan Internal / CRI 90+

Accessories

Product code	Description	Weight
GT11970	597 x 597 mm ceiling reinforcing board - 3 mm thick plywood with 185 mm diameter central cut-out	0.55 kg



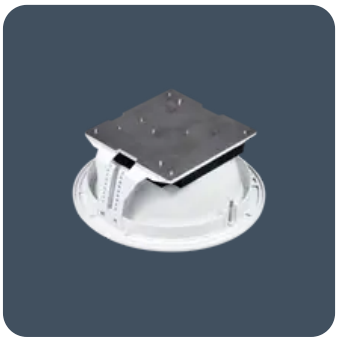
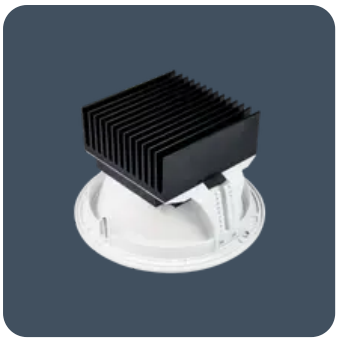




Click or scan here

View G3 Pro variants using our online filtering tool



Information is correct as of 25 Nov 2026, however must not be interpreted as a guarantee of individual product performance and/or characteristics. We reserve the right to alter specifications and designs without prior notice.