Glodome

Surface-mounted LED luminaires



Popular across a wide range of sectors, the Thorlux Glodome is a surface-mounted circular luminaire with an opal polycarbonate cover.

Ideal for both ceiling and wall mounting, Glodome casts light 'upward' and across the mounting surface, ensuring calming, even illumination with no dark patches. The luminaire is available in two sizes, both rated to IP40 water and dust ingress protection as standard, which can be upgraded to IP54 with an optional sealing gasket.

Emergency versions are available, using Lithium Iron Phosphate ($LiFePO_4$) battery technology to provide three hours of maintained emergency operation. $LiFePO_4$ batteries offer advantages such as a longer lifespan, lower energy consumption, and a compact cell size. Glodome is also available with SmartScan wireless communication options.

Applications: stairways, circulation areas, toilets, and information points.

- IP54 when used with optional sealing gasket (see accessories)
- SmartScan Radar versions with sensor discretely hidden behind the cover
- SmartScan wireless technology removes the need for control cabling. Ideal for retro-fit

IP40 **Up to 136.0 LL/CW** SMARTSCAN LUXGUARD

Specification

Mounting	**Surface**	IP rating	**IP40**
Nominal size	**380 mm dia.** **490 mm dia.**	Max presence detection height	**Up to 8 m**

Lighting

Optic	**Opal cover**	Lumen output	**1,290 lm - 3,945 lm**
Efficacy	**Up to 136.0 LL/CW**		

Emergency data

Emergency lumen output	**170 lm - 380 lm**	Emergency type	**Maintained**
Emergency duration	**3 hours**	Battery specification	**Lithium Iron Phosphate (LiFePO4)**

Power

LED power	**8 W - 26 W**	Circuit power	**10 W - 29 W**

Construction

Housing	**Spun aluminium body**	Finish	**Full polyester powder coat**
Body colour	**White**	Optical assembly	**Textured polycarbonate cover**

LED characteristics

CRI	**80+**	Colour temperature	**4000 K**
Rated life (hours)	**100 K - L90/B10**	LED protection	**LUX Guard**
Driver efficiency	**>88%**	Replaceable light source	**Yes**
Power factor	**>0.95**	MacAdam ellipse	**3 Step**
Flicker metric	**IEC TR 61547-1: PstLM ≤1.0 / SVM ≤0.4**		

Compliance

UKCA	**Yes**	CE	**Yes**
Energy efficiency class	**This product contains a light source of energy efficiency class B**		

Glodome

Dimensions

Large Version

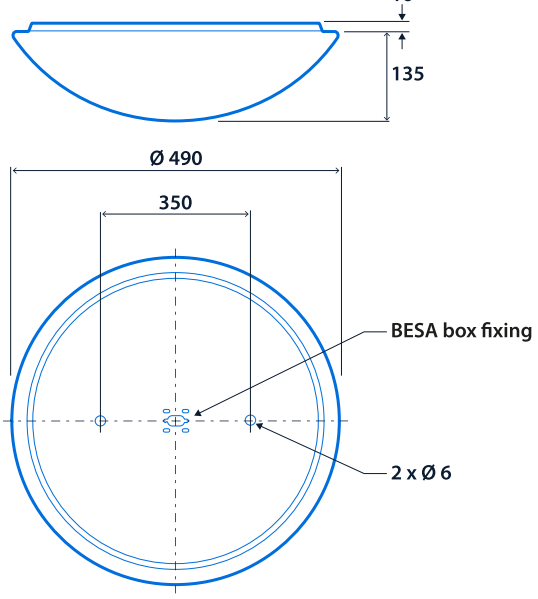

Small Version

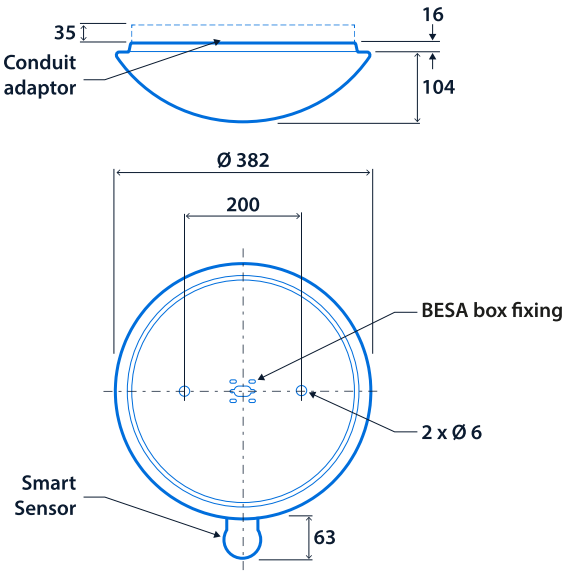

Glodome

Range

	Product version	LED power	Emergency system (optional)	CAT. No.	Lighting control system
SmartScan	Small	20 W	**W**	**GLO17426**	**SS / R**
Standard	Small	8 W	**T / E**	**GLO17405**	**A / L**
		16 W	**W / T / E**	**GLO16483**	**A / L**
		20 W	**W / T / E**	**GLO16484**	**A / L**
	Large	26 W	**T / E**	**GLO15856**	**A / L**

Emergency system - replace **GLO** with **WGL** SmartScan Emergency / **TGL** AutoTest Emergency / **EGL** Standard Emergency
Lighting control system - suffix catalogue number with **SS** SmartScan Internal / **R** SmartScan Radar / **A** Dimming (DALI) / **L** Non-dimming

E.g. **WGL17426SS** = Small / 20 W / SmartScan Emergency / SmartScan Internal

Accessories

Product code	Description	Weight
GLO16485	IP54 sealing gasket - small version	-
GLO16539	IP54 sealing gasket - large version	-
GLO17433	Conduit adaptor - Small version	-


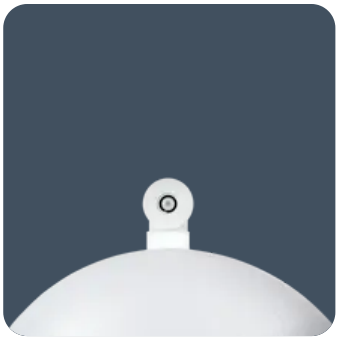


Click or scan here

View Glodome variants using our online filtering tool



Information is correct as of 25-Nov-2026, however must not be interpreted as a guarantee of individual product performance and/or characteristics. We reserve the right to alter specifications and designs without prior notice.