Jubilee-XL

LED surface-mounted controller luminaires

Widely used in the healthcare and education sectors, Jubilee-XL is a popular cornerstone of the Thorlux product range.

Jubilee-XL is a surface-mounted luminaire with special 'Satin-Glo' low-glare polycarbonate side controllers to provide high-angle illuminance. The high-quality micro-prism lens provides the main illumination element and cutoff. Selecting Jubilee-XL helps to achieve compliance with both BS EN 12464-1 and LG7 (<3000 cd/m² @ 65º).

Applications: schools, colleges, hospitals, and areas with computer screens.

- 'Satin-Glo' polycarbonate controller provides high angle illuminance
- Excellent optical design for EN12464-1 / LG7 (<3000 cd/m² @ 65º) compliance
- SmartScan wireless technology removes the need for control cabling. Ideal for retro-fit

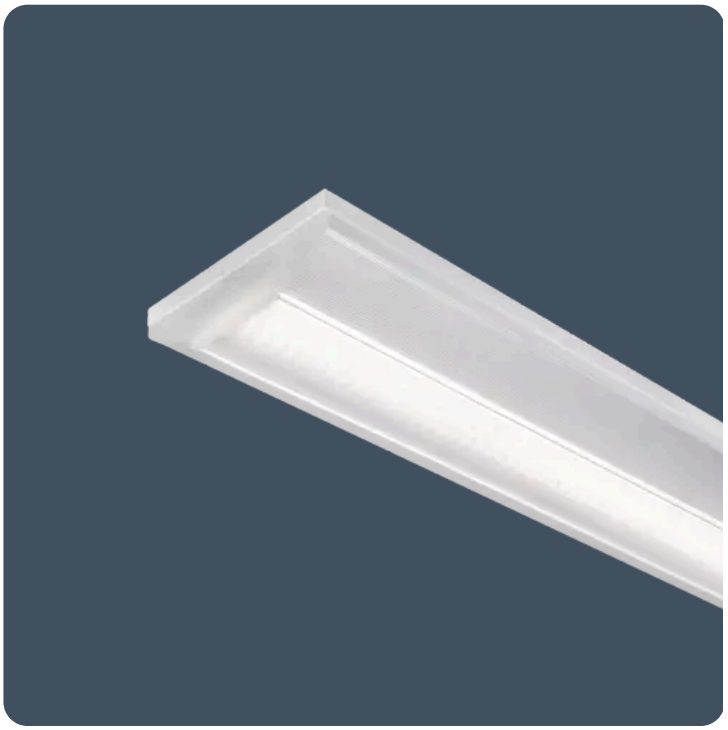

IP40 | Up to 151.9 LL/CW | SMARTSCAN | LUXGUARD

Specification

Mounting	**Surface**	IP rating	**IP40**
Nominal size	**1200 mm** **1500 mm**	Max presence detection height	**8 m**

Lighting

Optic	**Satin-Glo diffuser**	Lumen output	**2,635 lm - 7,120 lm**
Efficacy	**Up to 151.9 LL/CW**		

Emergency data

Emergency lumen output	**390 lm - 575 lm**	Emergency type	**Maintained**
Emergency duration	**3 hours**	Battery specification	**Nickel Metal Hydride (NiMH)**

Power

LED power	**14 W - 43 W**	Circuit power	**18 W - 50 W**

Jubilee-XL

Construction

Housing	**Zinc coated steel body**	Finish	**Full polyester powder coat**
Body colour	**White**	Optical assembly	**Polycarbonate diffuser with microprism lens**

LED characteristics

CRI	**80+**	Colour temperature	**4000 K**
Rated life (hours)	**100 K - L90/B10**	LED protection	**LUX Guard**
Driver efficiency	**>85%**	Replaceable light source	**Yes**
Power factor	**>0.95**	MacAdam ellipse	**3 Step**
Flicker metric	**IEC TR 61547-1: PstLM ≤1.0 / SVM ≤0.4**		

Compliance

UKCA	**Yes**	CE	**Yes**
Energy efficiency class	**This product contains a light source of energy efficiency class A**		

Dimensions

1200 versions

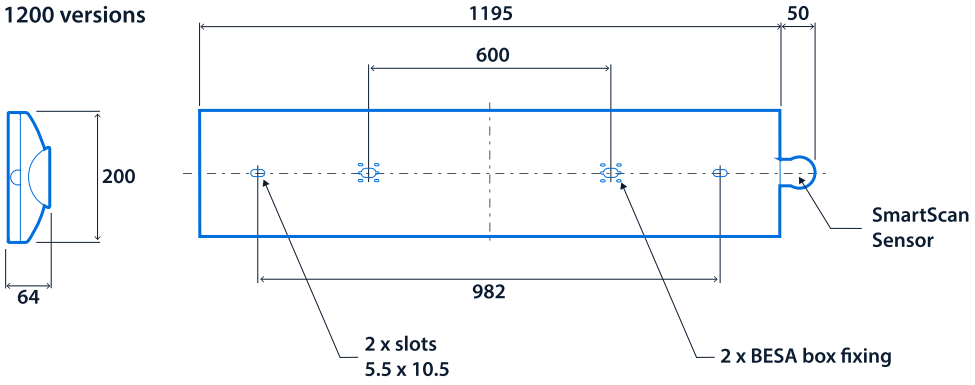

1500 versions

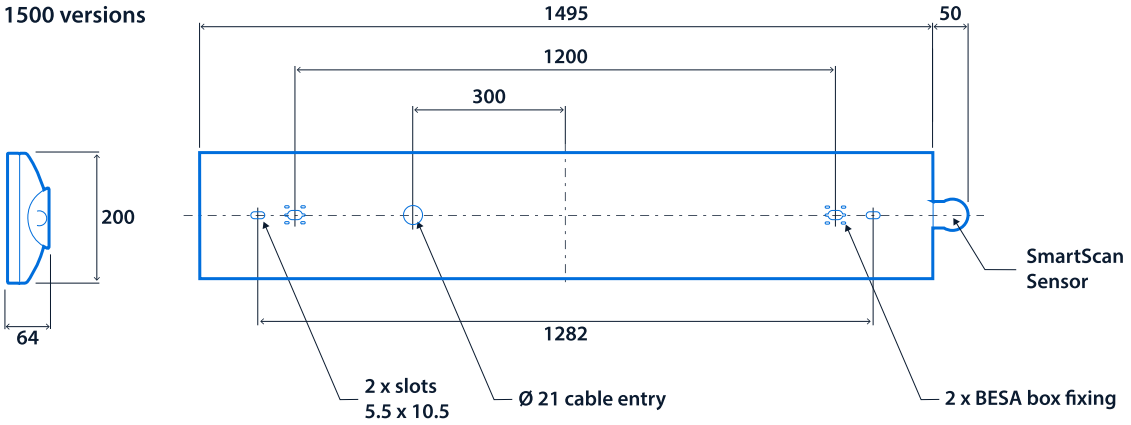

Range

	Nominal size	LED power	Emergency system (optional)	CAT. No.	Lighting control system
SmartScan	1200 mm	18 W	**WJB**	**JUB16949**	**SS**
		31 W	**WJB**	**JUB16950**	**SS**
	1500 mm	14 W	**WJB**	**JUB19631**	**SS**
		21 W	**WJB**	**JUB16693**	**SS**
		30 W	**WJB**	**JUB16694**	**SS**
		43 W	**WJB**	**JUB16695**	**SS**
Standard	1200 mm	18 W	**TJB / EJB**	**JUB16951**	**A / L**
		31 W	**TJB / EJB**	**JUB16952**	**A / L**
	1500 mm	14 W	**TJB / EJB**	**JUB19632**	**A / L**
		21 W	**TJB / EJB**	**JUB16697**	**A / L**
		30 W	**TJB / EJB**	**JUB16698**	**A / L**
		43 W	**TJB / EJB**	**JUB16699**	**A / L**

Emergency system - replace **JUB** with **WJB** SmartScan Emergency / **TJB** AutoTest Emergency / **EJB** Standard Emergency
Lighting control system - suffix catalogue number with **SS** SmartScan Internal / **A** Dimming (DALI) / **L** Non-dimming

E.g. **WJB16949SS** = 1200 mm / 18 W / SmartScan Emergency / SmartScan Internal

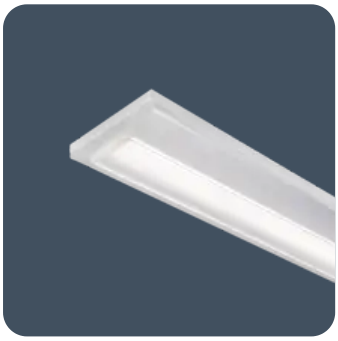



Click or scan here

View Jubilee-XL variants using our online filtering tool



Information is correct as of 25 Nov 2026, however must not be interpreted as a guarantee of individual product performance and/or characteristics. We reserve the right to alter specifications and designs without prior notice.