Juno B

High-performance LED pole-top luminaires



Juno B is a modern-looking, pole-top external luminaire with an aluminium cast body and spigot adaptor.

The high-performance Juno B features a UV-stabilised clear polycarbonate cover, rated IP66 for protection against water ingress and IK10 impact resistance. The luminaire contains an integral high-quality LED driver.

The Juno family of pole-top luminaires also includes Juno A, Juno C, and Juno D, providing a smart, complementary range of solutions for outdoor lighting.

Applications: car parks, amenity areas, and hospital estates.

- Integral high efficiency driver
- Extremely efficient and long system life up to 100,000 hours
- Fits 76mm columns as standard (60mm to special order)
- Photocell option
- Zero upward light

IP66 **IK10** **Up to 136.3 LL/CW** LUXGUARD

Specification

Mounting	**Column**	IP rating	**IP66**
Impact rating	**IK10**	Windage rating	**0.04 m²**

Lighting

Optic	**Clear cover**	Distribution	**Asymmetric** **Symmetric**
Lumen output	**5,380 lm - 13,560 lm**	Efficacy	**Up to 136.3 LL/CW**
External upward light	**Zero upward light**		

Power

LED power	**37 W - 101 W**	Circuit power	**42 W - 110 W**

Juno B

Construction

Housing	**Strong high pressure die-cast aluminium top and column mount**	Finish	**Full polyester powder coat**
Body colour	**Silver (RAL 9006)**	Optical assembly	**High impact UV stabilised polycarbonate cover rated IK10**
Gasket	**Long life silicone gasket**		

LED characteristics

CRI	**70+**	Colour temperature	**4000 K**
Rated life (hours)	**100 K - L80/B10**	LED protection	**LUX Guard**
Driver efficiency	**>93%**	Replaceable light source	**Yes**
Power factor	**>0.95**	MacAdam ellipse	**5 Step**
Flicker metric	**IEC TR 61547-1: PstLM ≤1.0 / SVM ≤0.4**		

Compliance

UKCA	**Yes**	CE	**Yes**
Energy efficiency class	**This product contains a light source of energy efficiency class B**		

Dimensions

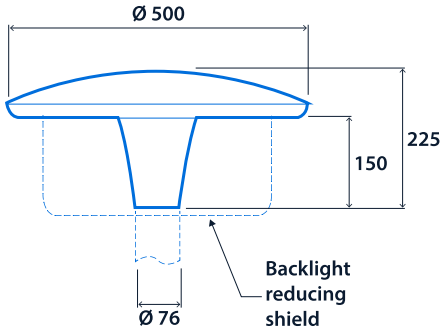

Range

LED power	Symmetric distribution	Asymmetric distribution	Lighting control system
37 W	**JUN19200**	**JUN19202**	**L / LPC**
78 W	**JUN19201**	**JUN19203**	**L / LPC**
101 W	**JUN19658**	**JUN19659**	**L / LPC**

Lighting control system - suffix catalogue number with **L** Non-dimming / **LPC** Photocell (non-dimming)

E.g. **JUN19200LPC** = 37 W / Symmetric distribution / Photocell (non-dimming)

Mounting Accessories

Product code	Description	Weight
POT101-76	Column adaptor - 101-76 mm - To fit on to 101 mm dia.	-

Accessories

Product code	Description	Weight
JUN19204	Backlight reducing shield kit	-



Click or scan here
View Juno B variants using our online filtering tool



Information is correct as of 25 Nov 2026, however must not be interpreted as a guarantee of individual product performance and/or characteristics. We reserve the right to alter specifications and designs without prior notice.