Juno D

High-performance LED pole-top luminaires



The outstanding Thorlux Juno D is a high-efficiency, IP66-rated, circular pole-top LED luminaire for higher mounting positions.

Juno D has been designed as a direct replacement for traditional circular pole-top discharge luminaires up to twin 400 W. It is available in 99 W to 326 W, with symmetric and asymmetric distributions. The high-performance luminaire is capable of producing almost 48,000 lumens of white light with colour rendition greater than 80 CRI.

The Juno family of pole-top luminaires also includes Juno A, Juno B, and Juno C, providing a smart, complementary range of solutions for outdoor lighting.

Applications: car parks, amenity areas, and hospital estates.

- Strong high-pressure die-cast aluminium top and column mount
- High-impact UV stabilised polycarbonate cover
- Smooth wipe clean surfaces, no dust traps
- Integral high efficiency drivers
- Extremely efficient and long system life up to 100,000 hours
- Fits 101mm columns as standard
- Photocell option
- Zero upward light

IP66 **IK10** **Up to 141.2 LL/CW** LUXGUARD

Specification

Mounting	**Column**	IP rating	**IP66**
Impact rating	**IK10**	Windage rating	**0.06 m²**

Lighting

Optic	**Clear cover**	Distribution	**Asymmetric** **Symmetric**
Lumen output	**13,880 lm - 47,575 lm**	Efficacy	**Up to 141.2 LL/CW**
External upward light	**Zero upward light**		

Juno D

Power

LED power	**99 W - 326 W**	Circuit power	**108 W - 350 W**

Construction

Housing	**Strong high pressure die-cast aluminium top and column mount**	Finish	**Full polyester powder coat**
Body colour	**Silver (RAL 9006)**	Optical assembly	**Acrylic high efficiency LED lenses with a high impact UV stabilised polycarbonate cover**
Gasket	**Long life silicone gasket**		

LED characteristics

CRI	**80+**	Colour temperature	**4000 K**
Rated life (hours)	**100 K - L80/B10**	LED protection	**LUX Guard**
Driver efficiency	**>90%**	Replaceable light source	**Yes**
Power factor	**>0.9**	MacAdam ellipse	**3 Step**
Flicker metric	**IEC TR 61547-1: PstLM ≤1.0 / SVM ≤0.4**		

Compliance

UKCA	**Yes**	CE	**Yes**
Energy efficiency class	**This product contains a light source of energy efficiency class B**		

Dimensions

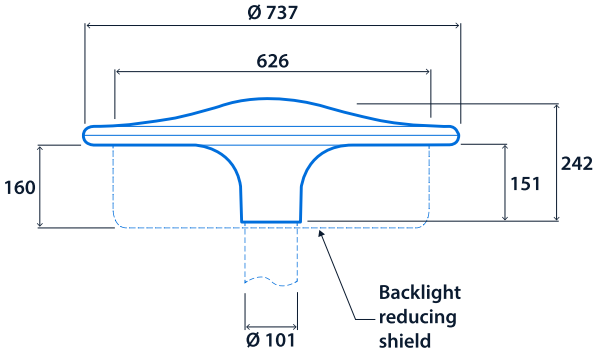

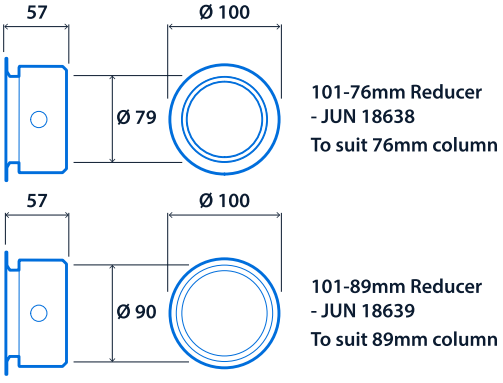

Range

LED power	Asymmetric distribution	LED power	Symmetric distribution	Lighting control system
99 W	**JUN18634**	177 W	**JUN18631**	**L / LPC**
132 W	**JUN18635**	246 W	**JUN18632**	**L / LPC**
166 W	**JUN18636**	326 W	**JUN18633**	**L / LPC**

Lighting control system - suffix catalogue number with **L** Non-dimming / **LPC** Photocell (non-dimming)

E.g. **JUN18634LPC** = 99 W / Asymmetric distribution / Photocell (non-dimming)

Mounting Accessories

Product code	Description	Weight
JUN18638	101 mm to 76 mm reducer	-
JUN18639	101 mm to 89 mm reducer	-

Accessories

Product code	Description	Weight
JUN18637	Backlight reducing shield kit	-





Click or scan here

View Juno D variants using our online filtering tool



Information is correct as of 25 Nov 2026, however must not be interpreted as a guarantee of individual product performance and/or characteristics. We reserve the right to alter specifications and designs without prior notice.