# Mercian

## High-performance wall-mounted luminaires



A high-performance, vandal-resistant luminaire, the Thorlux Mercian is photometrically designed to enable wide spacings in outdoor environments.

Mercian is manufactured with a die-cast aluminium body and impact-resistant, flame-retardant, UV-stabilised prismatic polycarbonate cover. This hard-wearing luminaire is rated IP65 for water and dust ingress protection and IK10 impact resistance. It is simple to mount using external stainless-steel brackets and is available with optional SmartScan controls, eliminating the need for extra cabling.

Applications: walkways and entrance areas, commercial premises, educational institutes, and hospital/healthcare buildings.

- Strong pressure die-cast LM2 aluminium body prevents distortion when fixing and preserves IP rating
- Spacings up to six times mounting height
- Optional photocell control
- Tamper-resistant cover screws available
- Simple to fix using external stainless-steel brackets and two lower points, all external to gasket line to preserve IP rating
- Complies with M.O.D. JSP482 Chapter 8 Document for ‘Category C’ areas
- SmartScan wireless technology removes the need for control cabling. Ideal for retro-fit

IP65 | IK10 | 110 LL/CW | SMARTSCAN | LUXGUARD

## Specification

| | | | |
|---|---|---|---|
| Mounting | **Surface** | IP rating | **IP65** |
| Impact rating | **IK10** | Max presence detection height | **8 m** |

## Lighting

| | | | |
|---|---|---|---|
| Optic | **Prismatic cover** | Lumen output | **3,300 lm** |
| Efficacy | **110 LL/CW** | | |

## Emergency data

| | | | |
|---|---|---|---|
| Emergency lumen output | **250 lm** | Emergency type | **Maintained** |
| Emergency duration | **3 hours** | Battery specification | **Lithium Iron Phosphate (LiFePO4)** |

## Power

| | | | |
|---|---|---|---|
| LED power | **26 W** | Circuit power | **30 W** |

## Construction

| | | | |
|---|---|---|---|
| Housing | **Strong high pressure die-cast LM2 aluminium body** | Finish | **Full polyester powder coat** |
| Body colour | **Textured black** | Optical assembly | **Impact-resistant and flame-retardant UV stabilised polycarbonate cover** |
| Cover fixings | **Stainless steel Pozidriv<br>Stainless steel T30 pin Torx** | | |

## LED characteristics

| | | | |
|---|---|---|---|
| CRI | **80+** | Colour temperature | **4000 K<br>5700 K** |
| Rated life (hours) | **100 K - L80/B10** | LED protection | **LUX Guard** |
| Driver efficiency | **>85%** | Replaceable light source | **Yes** |
| Power factor | **>0.9** | MacAdam ellipse | **3 Step** |
| Flicker metric | **IEC TR 61547-1: PstLM ≤1.0 / SVM ≤0.4** | | |

## Compliance

| | | | |
|---|---|---|---|
| UKCA | **Yes** | CE | **Yes** |
| Energy efficiency class | **This product contains a light source of energy efficiency class B** | | |

## Dimensions

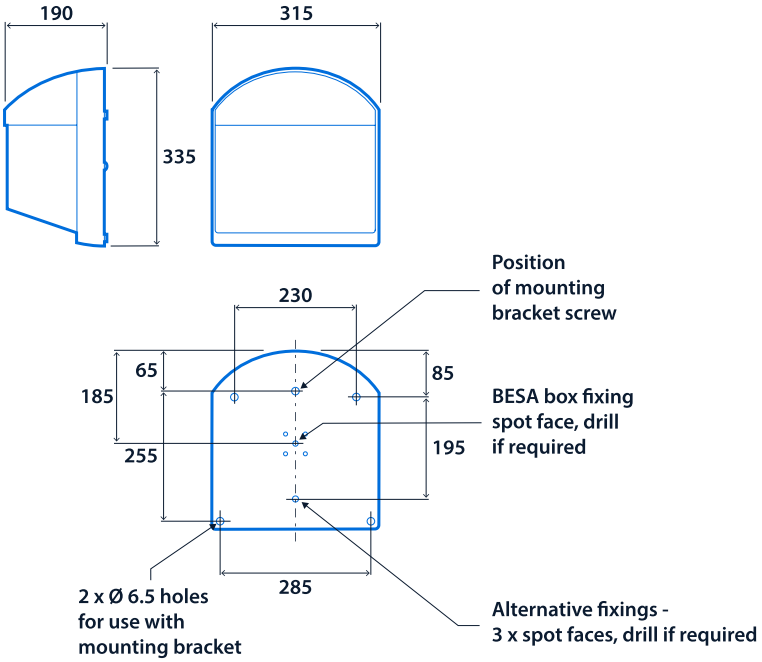
190
315
335
230
65
185
255
85
195
285
Position
of mounting
bracket screw
BESA box fixing
spot face, drill
if required
2 x Ø 6.5 holes
for use with
mounting bracket
Alternative fixings -
3 x spot faces, drill if required

## Range

| | LED power | Emergency system (optional) | 4000 K | 5700 K | Lighting control system |
|---|---|---|---|---|---|
| SmartScan | 26 W | **WMR** | **MER19102** | **MER19103** | **SS** |
| Standard | 26 W | **TMR / EMR** | **MER19104** | **MER19105** | **L / LPC** |

**Emergency system** - replace **MER** with **WMR** SmartScan Emergency / **TMR** AutoTest Emergency / **EMR** Standard Emergency
**Lighting control system** - suffix catalogue number with **SS** SmartScan Internal / **L** Non-dimming / **LPC** Photocell (non-dimming)
**Tamper-resistant screws** - suffix catalogue number with **T**

E.g. **TMR19104LPCT** = 26 W / AutoTest Emergency / 4000 K / Photocell (non-dimming) / Tamper-resistant screws

## Accessories

| Product code | Description | Weight |
|---|---|---|
| **KEY16977** | T30 pin Torx bit - Suitable for magnetic bit holder | - |







**Click or scan here**

**View Mercian variants using our online filtering tool**



Information is correct as of 25 Nov 2026, however must not be interpreted as a guarantee of individual product performance and/or characteristics. We reserve the right to alter specifications and designs without prior notice.