Prismalette 360

Vandal-resistant circular luminaires



The highly versatile Prismalette 360 is a circular luminaire with a high-efficiency satin diffuser, suitable for internal or external use.

Like the regular, square Prismalette, Prismalette 360 is designed to the highest standard of resistance to vandalism. Its strong, high-pressure die-cast aluminium body features a flame-retardant polycarbonate cover, and is rated IP66 for dust and water ingress protection and IK11 impact resistance. SmartScan Radar, microwave presence detector, photocell, and maintained emergency versions are available.

Applications: internal and external lighting for communal residential buildings, security lighting, rooftop, public staircases; pathway highlighting for schools, hospitals, and other public buildings.

- Strong high-pressure die-cast LM6 aluminium body and bezel
- Plain or hooded options with high efficiency fire-retardant satin polycarbonate diffuser
- Concealed tamper-resistant cover screws as standard
- Optional photocell control
- Optional bezel trim for semi-recessed mounting
- Complies with M.O.D. JSP482 Chapter 8 Document for ‘Category C’ areas
- Microwave presence detector versions with stand-by light level feature
- SmartScan Radar versions with sensor discretely hidden behind the cover

IP66 **IK11** **Up to 118.2 LL/CW** SMARTSCAN LUXGUARD

Specification

Mounting	**Surface**	IP rating	**IP66**
Impact rating	**IK11**	Max presence detection height	**Up to Wall 2.5 m / Ceiling 4 m**

Lighting

Optic	**Satin diffuser**	Lumen output	**640 lm - 2,245 lm**
Efficacy	**Up to 118.2 LL/CW**		

Prismalette 360

Emergency data

Emergency lumen output	**350 lm - 360 lm**	Emergency type	**Maintained**
Emergency duration	**3 hours**	Battery specification	**Lithium Iron Phosphate (LiFePO4)** **Nickel Metal Hydride (NiMH)**

Power

LED power	**4 W - 16 W**	Circuit power	**6 W - 19 W**

Construction

Housing	**Strong high pressure die-cast LM6 aluminium body and bezel**	Finish	**Full polyester powder coat**
Body colour	**Graphite** **White**	Optical assembly	**High efficiency fire-retardant polycarbonate diffuser**
Gasket	**Long life silicone gasket**	Cover fixings	**Bezel - Stainless steel T10 pin Torx / LED Module - Stainless steel T25 pin Torx**

LED characteristics

CRI	**80+**	Colour temperature	**4000 K**
Rated life (hours)	**100 K - L90/B10**	LED protection	**LUX Guard**
Driver efficiency	**>70%**	Replaceable light source	**Yes**
Power factor	**>0.9**	MacAdam ellipse	**3 Step**
Flicker metric	**IEC TR 61547-1: PstLM ≤1.0 / SVM ≤0.4**		

Compliance

UKCA	**Yes**	CE	**Yes**
Energy efficiency class	**This product contains a light source of energy efficiency class C**	MOD compliance	**M.O.D. DSA 03.OME Part 2, Chapter 8 for 'Category C' areas (formerly JSP482)**

Prismalette 360

Dimensions

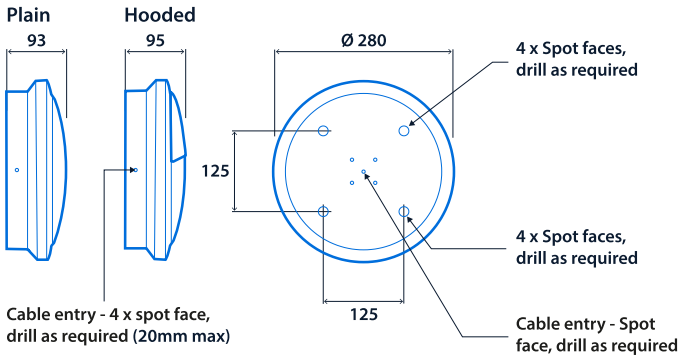

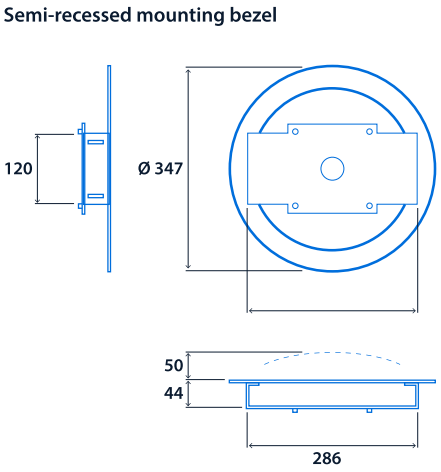

Prismalette 360

Range

Emergency system (optional)	Product	LED power	Cover	Photocell	Colour	Lighting control system
W SmartScan Emergency*	**PM** Prismalette 360	**004** 4 W ***	**H** Hooded	**P** Photocell****	**G** Graphite	**R** SmartScan Radar
T AutoTest Emergency**		**008** 8 W		**X** No photocell	**W** White	**M** Microwave presence detector
E Standard Emergency**						**L** Non-dimming
		016 16 W	**P** Plain			

* **Only** available with **R** / **L** control type ** **Only** available with **M / L** control type *** **Only** available with **R / L** control type
**** **Only** available with **W / T** emergency system and **L** control type

E.g. **WPM004HPGL** = SmartScan Emergency / Prismalette 360 / 4 W / Hooded / Photocell / Graphite / Non-dimming

Accessories

Product code	Description	Weight
PM20094G2	Bezel for semi-recessed mounting - Graphite	-
PM20094W9	Bezel for semi-recessed mounting - White	-
PM20098	Tamper-resistant T10 and T25 pin Torx bit set	-


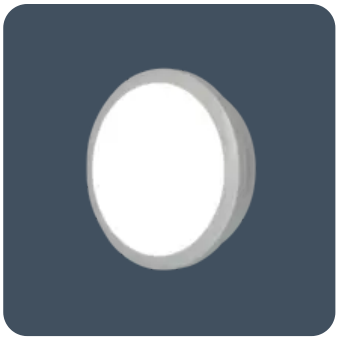



Click or scan here
View Prismalette 360 variants using our online filtering tool



Information is correct as of 25 Nov 2026, however must not be interpreted as a guarantee of individual product performance and/or characteristics. We reserve the right to alter specifications and designs without prior notice.