Quadrum

Recessed LED display luminaires

The Thorlux Quadrum is a recess-mounted LED display luminaire.

This discreet square downlighter offers asymmetric light distribution, making it ideal for illuminating vertical surfaces in a variety of settings. Quadrum is available in 17 W, 26 W, and 41 W versions.

Applications: reception areas, retail, and display.

- Asymmetric distribution providing uniform illumination of vertical surfaces
- Supplied with remote gear unit fitted with 2 m lead
- Can be supplied pre-wired with a purpose made 1 m connection lead for plugging directly into the Smart Hub

Notes: Black and silver finishes available to special order (minimum order quantity applies)

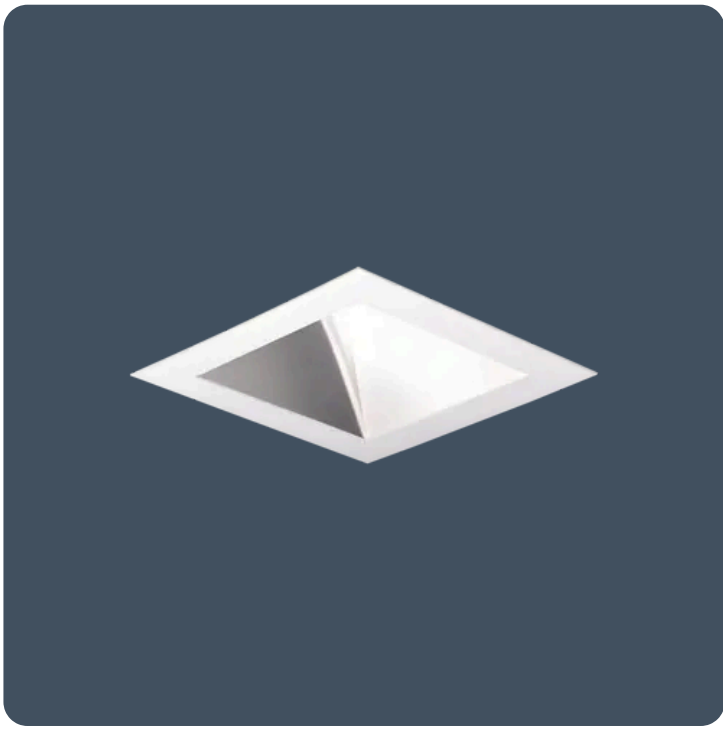

IP20 **Up to 100.8 LL/CW**

Specification

Mounting	**Recessed**	IP rating	**IP20**

Lighting

Distribution	**Asymmetric**	Lumen output	**1,875 lm - 4,025 lm**
Efficacy	**Up to 100.8 LL/CW**		

Power

LED power	**17 W - 41 W**	Circuit power	**20 W - 47 W**

Construction

Housing	**Zinc coated steel bezel**	Finish	**Full polyester powder coat**
Body colour	**Satin white**		

Quadrum

LED characteristics

CRI	**80+**	Colour temperature	**3000 K** **4000 K**
Rated life (hours)	**50 K - L70/B10**	LED protection	**-**
Driver efficiency	**>80%**	Power factor	**>0.9**
MacAdam ellipse	**3 Step**	Flicker metric	**IEC TR 61547-1: PstLM ≤1.0 / SVM ≤0.4**

Compliance

UKCA	**Yes**	CE	**Yes**

Dimensions

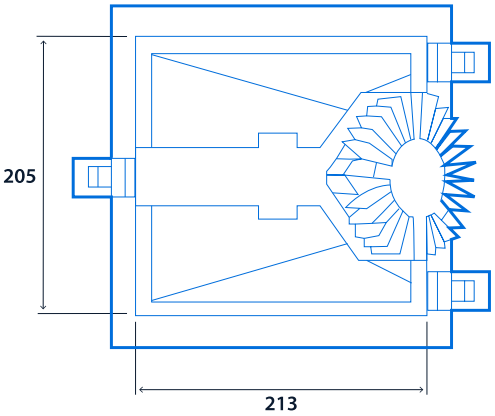

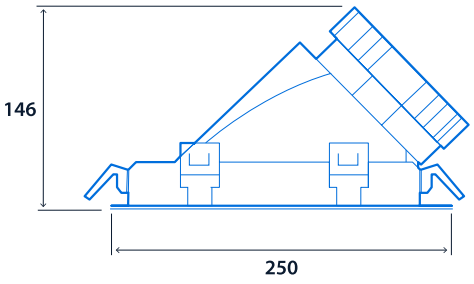

Cut-out - 230 x230
Minimum ceiling void - 200

Standard Remote Driver

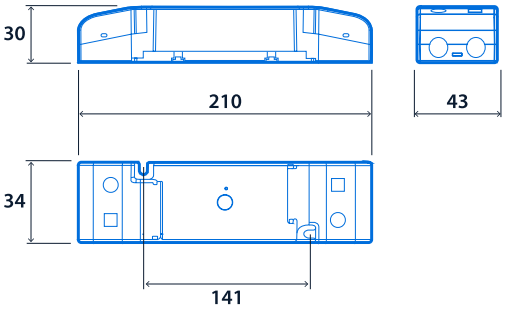

Quadrum

Range

Colour temperature	LED power	CAT. No.	Lighting control system
3000 K	17 W	**QR18050**	**A / L**
	26 W	**QR18051**	**A / L**
	41 W	**QR18052**	**A / L**
4000 K	17 W	**QR18053**	**A / L**
	26 W	**QR18054**	**A / L**
	41 W	**QR18055**	**A / L**

Lighting control system - suffix catalogue number with **A** Dimming (DALI) / **L** Non-dimming
Hub version - suffix catalogue number with **SHL**

E.g. **QR18050LSHL** = 3000 K / 17 W / Non-dimming / Hub version

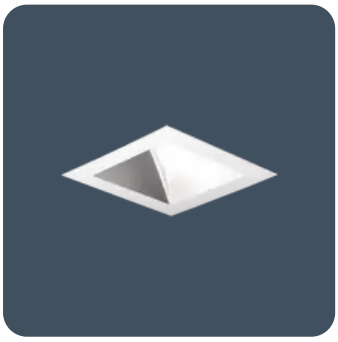

Click or scan here
View Quadrum variants using our online filtering tool



Information is correct as of 25-Nov-2026, however must not be interpreted as a guarantee of individual product performance and/or characteristics. We reserve the right to alter specifications and designs without prior notice.