Qubex

360° visibility, increased viewing distance IP65 exit signs



Designed for clear visibility over significant distances, Qubex is a large, four-sided emergency exit sign that delivers 360° visibility. Qubex is available in 30 m or 50 m viewing range versions.

Qubex features long-life Lithium Iron Phosphate ($LiFePO_4$) battery technology with SmartScan wireless communication versions. The luminaire is IP65-rated and available in maintained or non-maintained versions. It offers easy installation and maintenance with surface or suspended mounting options.

Applications: large open areas, warehouses, exhibition halls, supermarkets, factories, and sports halls.

- High visibility 360° viewing exit signage
- Option of 30 m or 50 m maximum viewing distance in accordance with BS EN 1838
- Reliable Lithium Iron Phosphate (LiFePO4) battery technology
- ISO 7010 fixed direction printed legends
- Simple to install, full status reporting SmartScan wireless communication versions
- Surface mounted - optional 4 m wire suspension kit
- Status indicator shows operational condition

IP65 SMARTSCAN

Specification

Mounting	**Surface** **Suspended**	IP rating	**IP65**

Emergency data

Legend type	**ISO 7010 fixed direction**	Maximum viewing distance	**Up to 50 m**
Emergency type	**Maintained (wire link may be removed to enable non-maintained operation)**	Emergency duration	**3 hours**
Battery specification	**Lithium Iron Phosphate (LiFePO4)**		

Power

LED power	**3.6 W**	Circuit power	**8.2 W**

Construction

Housing	**Polycarbonate body**	Body colour	**White**

Compliance

UKCA	**Yes**	CE	**Yes**

Dimensions

Viewing distance 30 m

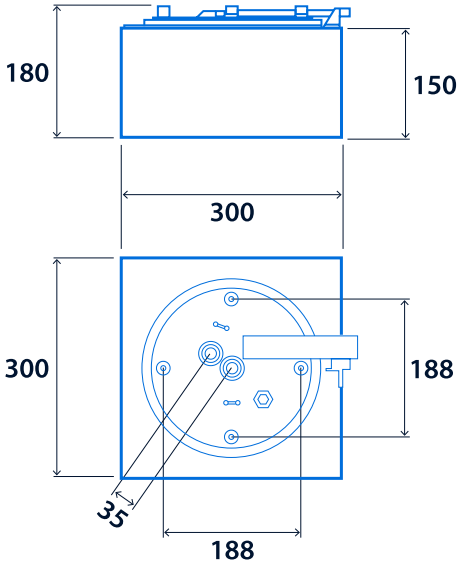

Viewing distance 50 m

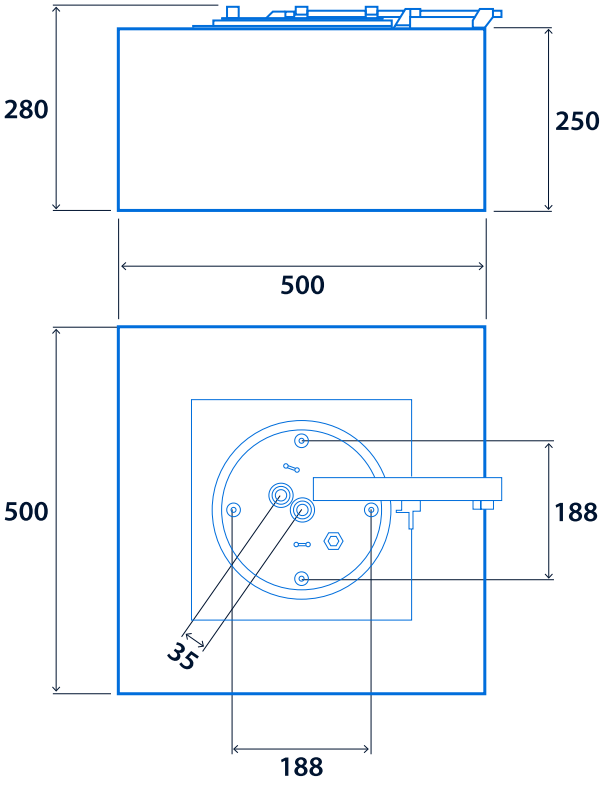

Range

Viewing distance	LED power	Emergency system	CAT. No.	Emergency duration	Emergency type
30 m	4 W	**W / D / E**	**QB20933**	3 hour	Maintained *
50 m	4 W	**W / D / E**	**QB20934**	3 hour	Maintained *

* Wire link may be removed to enable non-maintained operation

Emergency system - prefix catalogue number with **W** SmartScan Emergency / **D** DALI / Self-Test Emergency / **E** Standard Emergency

E.g. **WQB20933** = 30 m viewing distance / 4 W / SmartScan Emergency

Accessories

Product code	Description	Weight
QB20936	Wire suspension kit - 4 m length	0.27 kg

Spares

Product code	Description	Weight
QB20935	Lithium Iron Phosphate (LiFePO4) battery - End of life batteries can be returned to Thorlux for recycling	0.09 kg


50 m viewing distance - front


50 m viewing distance - rear


50 m viewing distance - top


30 m viewing distance - front


30 m viewing distance - rear

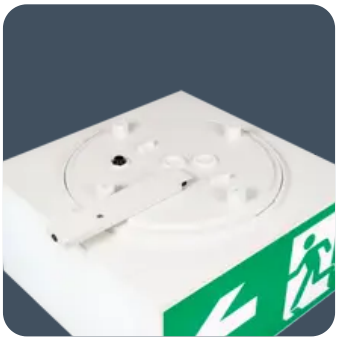
30 m viewing distance - top


Emergency status LED

Click or scan here
View Qubex variants using our online filtering tool



Information is correct as of 25 Nov 2026, however must not be interpreted as a guarantee of individual product performance and/or characteristics. We reserve the right to alter specifications and designs without prior notice.