SkyGlo CA

Colour temperature-changing opal polycarbonate diffuser luminaires

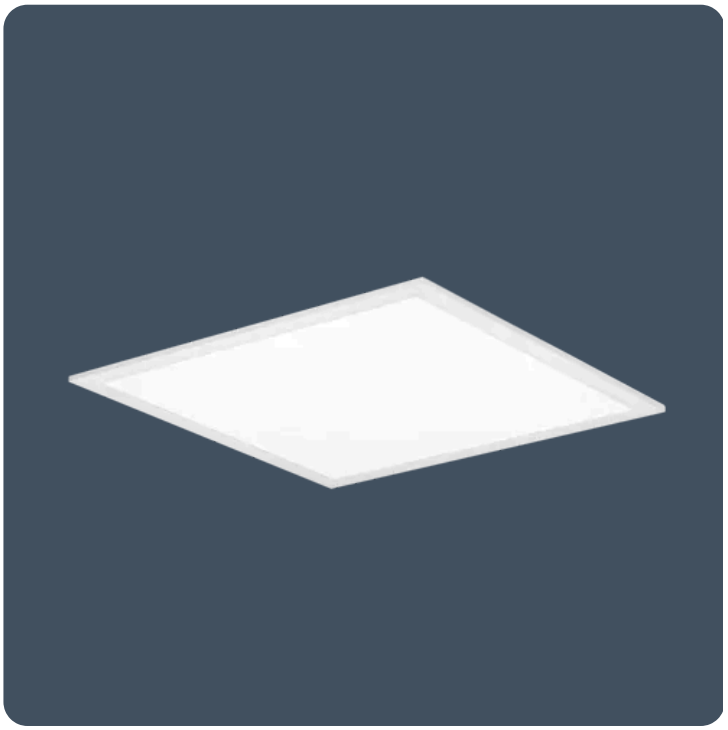

SkyGlo CA is a tuneable-white, highly efficient, back-lit luminaire with an opal polycarbonate diffuser.

SkyGlo CA is part of the SkyCore family, a range of luminaires designed with sustainability and circularity principles in mind. SkyCore luminaires use the Fast-Fix wiring enclosure and Thorlux-patented LUX Guard technology for faster installation, future flexibility, and prolonged life.

SkyGlo CA uses Thorlux ColourActive human-centric lighting technology to produce specially formulated artificial light that follows the natural cycle of daylight, intended to promote wellbeing, mood and health. Varying the colour temperature of artificial lighting to dynamically emulate daylight may help regulate a person's circadian rhythm, improving lighting conditions and potentially benefiting health and well-being.

Applications: education, healthcare, break-out areas, and canteens.

- Fitted with 3000 K and 6500 K LEDs for colour temperature control
- Shallow body depth
- Suitable for most ceiling types with optional side arm suspensions and plasterboard mounting kits
- Designed to exclude dust, dirt and flies. All control gear is outside the LED enclosure
- Rapid installation using Fast-Fix wiring enclosure
- ColourActive versions feature SmartScan wireless technology removes the need for control cabling. Ideal for retrofit
- ColourControl versions fitted with DALI DT8 driver for connection to external control

IP40 (IP20 above ceiling) **Up to IK09** **Up to 121.5 LL/CW** SMARTSCAN LUXGUARD **TM66 circularity score 2.7**

Specification

Mounting	**Recessed**	IP rating	**IP40 (IP20 above ceiling)**
Impact rating	**Up to IK09**	Nominal size	**600 x 600 mm**

Sustainability

TM66 circularity score	**2.7**

SkyGlo CA

Lighting

Optic	**Opal diffuser**	Lumen output	**2,340 lm - 4,610 lm**
Efficacy	**Up to 121.5 LL/CW**		

Emergency data

Emergency lumen output	**325 lm**	Emergency type	**Maintained**
Emergency duration	**3 hours**	Battery specification	**Nickel Metal Hydride (NiMH)**

Power

LED power	**16 W - 32 W**	Circuit power	**21 W - 38 W**

Construction

Housing	**Zinc coated steel body**	Finish	**Full polyester powder coat**
Body colour	**White (RAL 9016)**	Optical assembly	**Polycarbonate TP(a) fire-retardant diffuser to aid LG7 compliance**

LED characteristics

CRI	**80+**	Colour temperature	**3000-6500 K**
Rated life (hours)	**100 K - L80/B10**	LED protection	**LUX Guard**
Driver efficiency	**>76%**	Replaceable light source	**Yes**
Power factor	**>0.9**	MacAdam ellipse	**3 Step**
Flicker metric	**IEC TR 61547-1: PstLM ≤1.0 / SVM ≤0.4**		

Compliance

UKCA	**Yes**	CE	**Yes**
Energy efficiency class	**This product contains a light source of energy efficiency class B**	Thermoplastic rating	**TP(a)**

Dimensions

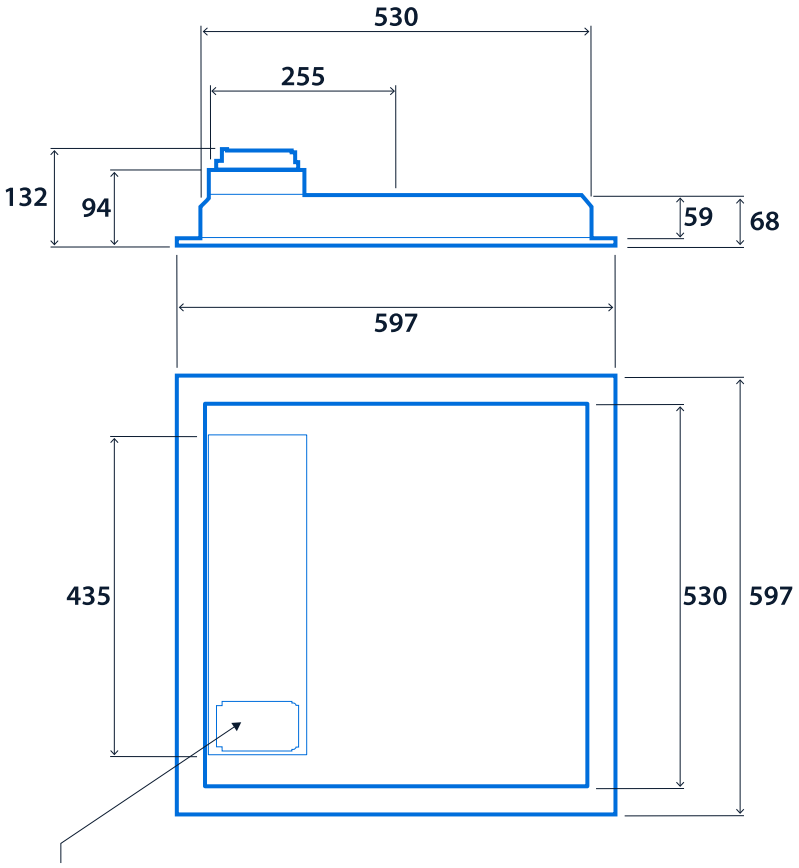

3-pole TEE (SmartScan versions)
Fast-Fix wiring enclosure (Non-dimming and DALI versions)

SkyGlo CA

Range

Emergency system (optional)	Product	LED power	Mounting	Nominal size	Lighting control system
W SmartScan Emergency*	**SG** SkyGlo	**16** 16 W	**R** Recessed	**M** 600 x 600 mm	**CA** ColourActive
T AutoTest Emergency**		**22** 22 W			**CC** ColourControl
E Standard Emergency**		**28** 28 W			
		32 32 W			

* **Only** available with **CA** control type ** **Only** available with **CC** control type

E.g. **WSG16RMCA** = SmartScan Emergency / SkyGlo / 16 W / Recessed / 600 x 600 mm / ColourActive

Accessories

Product code	Description	Weight
RAD16877	Recessing frame kit for plasterboard ceiling - 600 x 600	3.7 kg
IK20277	Side arm suspension kit - 4 arms per kit - Not required for lay-in mounting	-

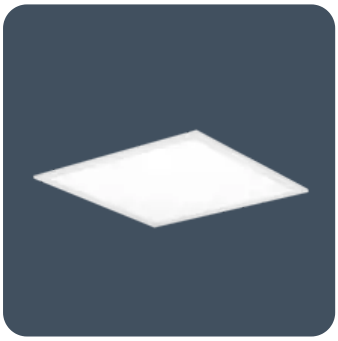

Click or scan here

View SkyGlo CA variants using our online filtering tool



Information is correct as of 25-Nov-2026, however must not be interpreted as a guarantee of individual product performance and/or characteristics. We reserve the right to alter specifications and designs without prior notice.