Swivix

Adjustable recessed accent spotlight luminaires



Designed to highlight points of interest and crucial displays, Swivix is a recessed accent spotlight with 355° azimuth and 70° vertical adjustment.

This flexible spot is designed for rapid installation to minimise disruption. Swivix is fitted with CRI 90 LEDs with an enhanced R9 value; these high CRI levels ensure vivid, crisp and enriched colour quality, making Swivix an ideal choice for attractive display lighting in the retail environment. Additionally, Swivix is available with either 3000 K or 4000 K colour temperatures, as required.

Applications: office, retail, and reception areas.

- 40° beam angle
- 355° azimuth adjustment
- 70° vertical adjustment
- Sprung suspension arms for rapid installation
- Supplied with remote gear unit fitted with 0.5 m lead
- Can be supplied pre-wired with a purpose made 1 m connection lead for plugging directly into the SmartScan Hub
- Fitted with CRI 90 LEDs with enhanced R9 value. Suitable for retail applications

IP20 **Up to 104.5 LL/CW**

Specification

Mounting	**Recessed**	IP rating	**IP20**

Lighting

Distribution	**40° beam**	Lumen output	**970 lm - 1,045 lm**
Efficacy	**Up to 104.5 LL/CW**		

Power

LED power	**8 W**	Circuit power	**10 W**

Swivix

Construction

Housing	**High pressure die-cast aluminium bezel**	Finish	**Full polyester powder coat**
Body colour	**Satin white**		

LED characteristics

CRI	**90+**	Colour temperature	**3000 K** **4000 K**
Rated life (hours)	**50 K - L70/B10**	LED protection	**-**
Driver efficiency	**>80%**	Power factor	**>0.9**
MacAdam ellipse	**3 Step**	Flicker metric	**IEC TR 61547-1: PstLM ≤1.0 / SVM ≤0.4**

Compliance

UKCA	**Yes**	CE	**Yes**

Dimensions

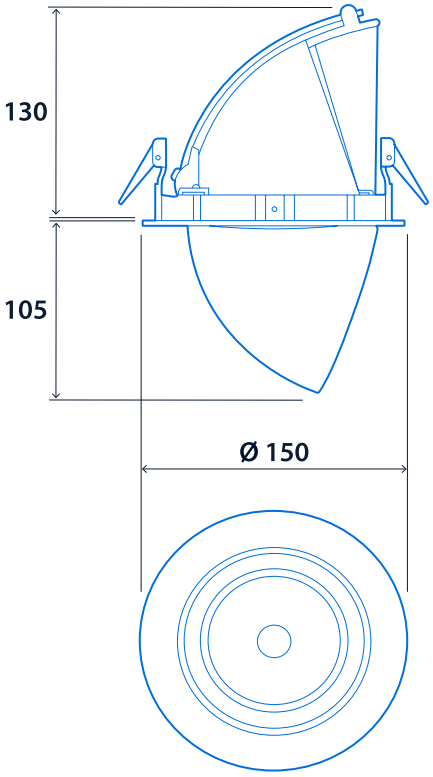

Standard Remote Driver

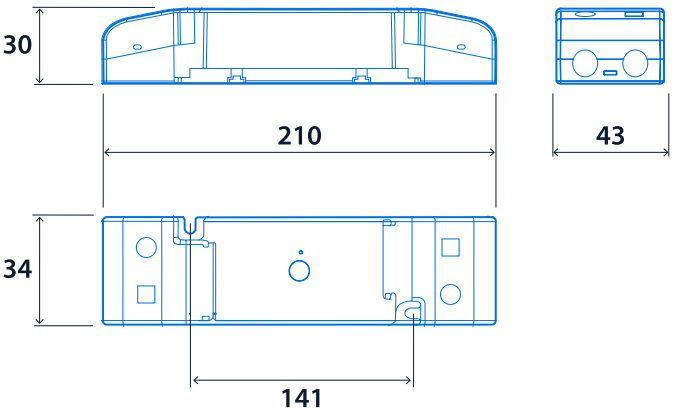

Cut-out - Ø 140
Minimum ceiling void - 210

Range

LED power	Colour temperature	40° beam	Lighting control system
8 W	3000 K	**SWV19734**	**A / L**
	4000 K	**SWV19735**	**A / L**

Lighting control system - suffix catalogue number with **A** Dimming (DALI) / **L** Non-dimming
Hub version - suffix catalogue number with **SHL** (**Only** available with **L** control type)

E.g. **SWV19734LSHL** = 8 W / 3000 K / 40° beam / Non-dimming / Hub version



Click or scan here

View Swivix variants using our online filtering tool



Information is correct as of 25 Nov 2026, however must not be interpreted as a guarantee of individual product performance and/or characteristics. We reserve the right to alter specifications and designs without prior notice.