Three-65 Type 'n'

Hazardous area LED emergency bulkhead luminaires

The Thorlux Three-65 Type 'n' is an IP65-sealed self-test emergency LED luminaire for non-maintained use.

Three-65 Type 'n' is constructed from strong die-cast aluminium with an opal polycarbonate cover. The luminaire is classified as suitable for use in low-impact risk areas and uses a nickel metal hydride (NiMH) rechargeable battery to provide three hours of self-test emergency operation.

Three-65 Type 'n' can be used to provide illuminated escape route identification using the optional self-adhesive legend kit, which can be ordered with the luminaire.

Applications: Zone 2 & 22 areas.

- Suitable for use in areas classified as low impact risk
- Optional directional self-adhesive legends
- Nickel metal hydride rechargeable battery
- Three hour self-test emergency operation
- Suitable for ambient temperatures of 0°C to +40°C



IP65

Specification

Mounting	**Surface**	IP rating	**IP65**

Lighting

Optic	**Opal cover**

Emergency data

Emergency lumen output	**150 lm**	Emergency type	**Non-maintained**
Emergency duration	**3 hours**	Battery specification	**Nickel Metal Hydride (NiMH)**

Power

LED power	**3 W**	Circuit power	**4 W**

Three-65 Type 'n'

Construction

Housing	**Die-cast aluminium body**	Body colour	**Silver**
Optical assembly	**Polycarbonate cover**		

LED characteristics

CRI	**70+**	Colour temperature	**6500 K**
Rated life (hours)	**50 K - L70/B10**	LED protection	**-**
MacAdam ellipse	**5 Step**		

Compliance

UKCA	**Yes**	CE	**Yes**
Hazardous compliance	**II 3 D Ex tc IIIC T60-80°C Dc** **II 3 G Ex nR IIC T4 Gc**	ATEX certified	**Yes**

Dimensions

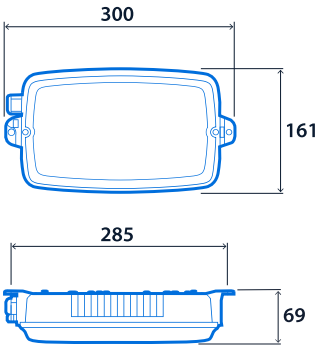

Three-65 Type 'n'

Range

LED power	CAT. No.	Emergency duration	Emergency type
3 W	**TFB16856**	3 hour	Non-maintained

Accessories

Product code	Description	Weight
EFB16857	ISO 7010 self adhesive legend - Arrow left	-
EFB16858	ISO 7010 self adhesive legend - Arrow right	-
EFB16859	ISO 7010 self adhesive legend - Arrow down	-



QR Code

Click or scan here

View Three-65 Type 'n' variants using our online filtering tool



Information is correct as of 25-Nov-2026, however must not be interpreted as a guarantee of individual product performance and/or characteristics. We reserve the right to alter specifications and designs without prior notice.