Zenith-L

Ceiling-mounted adjustable spotlights



Zenith-L is a ceiling-mounted LED display luminaire with integral control gear.

This practical spotlight can be adjusted through 300° azimuth and 180° vertical. 20 W, 28 W, or 35 W (17°, 28° or 41°) beam versions are all available. CRI 90 LEDs with enhanced R9 value levels ensure vivid, crisp and enriched colour quality, making Zenith-L an ideal choice for enticing display lighting in a range of environments.

Applications: office, retail, reception areas, restaurants, hospitality areas, and arenas.

- 17°, 28° and 41° beam angle versions
- 355° azimuth adjustment
- 180° vertical adjustment
- Integral electronic control gear
- Can be supplied pre-wired with a purpose made 1 m connection lead for plugging directly into the Smart Hub
- Fitted with CRI 90 LEDs with enhanced R9 value. Suitable for retail applications
- Suitable for ceiling mount only

Notes: Black and silver finishes or CRI 80 versions available to special order (minimum order quantity applies)

IP20 **Up to 97.3 LL/CW**

Specification

Mounting	**Surface**	IP rating	**IP20**

Lighting

Distribution	**17° beam** **28° beam** **41° beam**	Lumen output	**1,960 lm - 3,625 lm**
Efficacy	**Up to 97.3 LL/CW**		

Power

LED power	**20 W - 35 W**	Circuit power	**24 W - 41 W**

Zenith-L

Construction

Housing	**High pressure die-cast aluminium body with extruded aluminium gear enclosure**	Finish	**Full polyester powder coat**
Body colour	**Satin white**	Optical assembly	**High performance aluminium reflector with injection moulded anti-glare bezel**

LED characteristics

CRI	**90+**	Colour temperature	**3000 K** **4000 K**
Rated life (hours)	**50 K - L70/B10**	LED protection	**-**
Driver efficiency	**>80%**	Power factor	**>0.9**
MacAdam ellipse	**3 Step**	Flicker metric	**IEC TR 61547-1: PstLM ≤1.0 / SVM ≤0.4**

Compliance

UKCA	**Yes**	CE	**Yes**

Dimensions

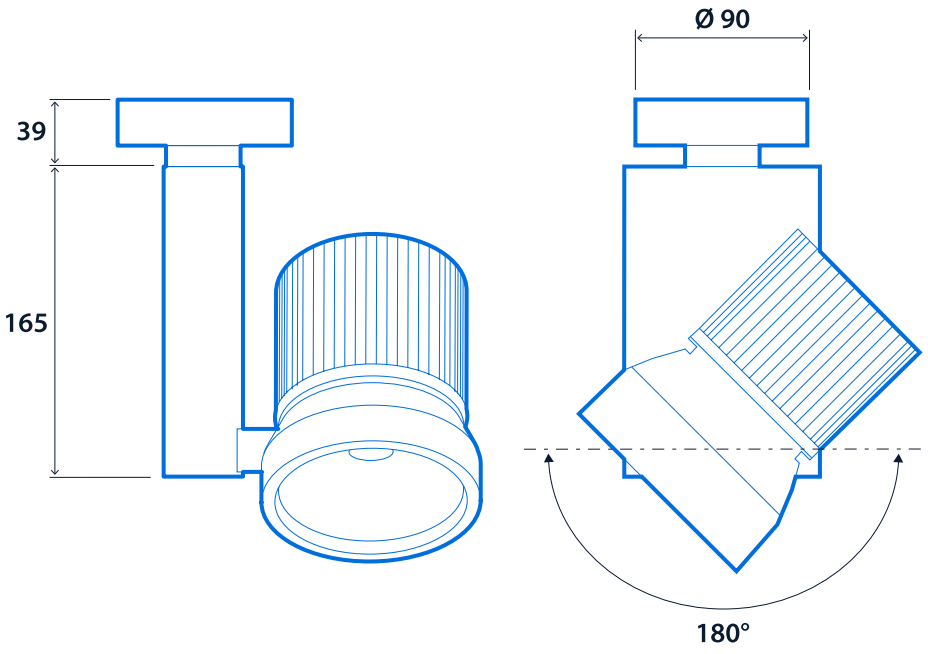

Range

Colour temperature	LED power	17° beam	28° beam	41° beam	Lighting control system
3000 K	20 W	**ZEN18080**	**ZEN18086**	**ZEN18092**	**A / L**
	28 W	**ZEN18081**	**ZEN18087**	**ZEN18093**	**A / L**
	35 W	**ZEN18082**	**ZEN18088**	**ZEN18094**	**A / L**
4000 K	20 W	**ZEN18083**	**ZEN18089**	**ZEN18095**	**A / L**
	28 W	**ZEN18084**	**ZEN18090**	**ZEN18096**	**A / L**
	35 W	**ZEN18085**	**ZEN18091**	**ZEN18097**	**A / L**

Lighting control system - suffix catalogue number with **A** Dimming (DALI) / **L** Non-dimming
Hub version - suffix catalogue number with **SHL** (**Only** available with **L** control type)

E.g. **ZEN18080LSHL** = 3000 K / 20 W / 17° beam / Non-dimming / Hub version



Click or scan here

View Zenith-L variants using our online filtering tool



Information is correct as of 25 Nov 2026, however must not be interpreted as a guarantee of individual product performance and/or characteristics. We reserve the right to alter specifications and designs without prior notice.